MIRO Auxiliary I/O Module (Miro Aux)

Quick Start Guide (QSG)

Figure 1 - Miro AUX (Model: Aux-40)

Address: Unit 1, 3 Tollis Place, Seven Hills, NSW 2147, Sydney, Australia
Telephone: +61 2 8283 6945; **Fax:** +61 2 8212 8105
Website: www.chkpowerquality.com.au; **Enquiries:** sales@chkpowerquality.com.au

1. Scope and Objective

This document outlines how to:

- Connect the Miro Aux to the Miro range of Power Quality Analysers (Miro).
- Configure the Miro so it can be utilised with the Miro Aux.
- Connect third party inputs to the Miro Aux module.

2. Before you start

It is assumed the user is familiar with the Miro hardware and Citrus software.

Ensure the latest versions of Citrus and Miro firmware are installed. These can be found at the following link: http://www.chkpowerquality.com.au/downloads/

3. Miro Aux Hardware

The Miro Aux provides additional input and output signal (I/O) capability to the Miro. The Miro monitors and logs these additional I/O signals.

The version in Figure 1 (Aux-40) provides four (4) inputs and no outputs. The inputs are all 4-20mA signal type and are intended to be connected to third-party instruments.

The main hardware features of the Miro Aux shown in Figure 1 are:

- Pluggable I/O terminals (AI-1, AI-2, AI-3, AI-4);
- Port for communicating with Miro (PORT);
- Two pluggable RTD input ports (RTD-1, RTD-2);
- Temperature connections (T1 and T2); and
- Ground connection (only shown in Figure 7).

Accessories:

- 1 X communication cable (Miro Aux PORT to Miro); and
- 2 X temperature connector cable for T1 and T2.

4. Connection Diagram

4.1 Miro TxM to Miro Aux

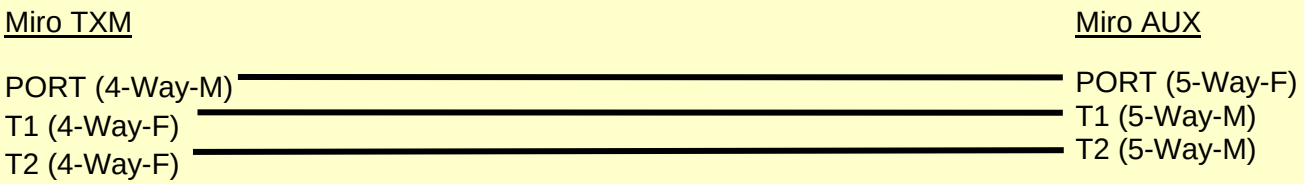

Figure 2 - Interface: Miro to Miro AUX

4.2 Miro Aux to RTD Sensors

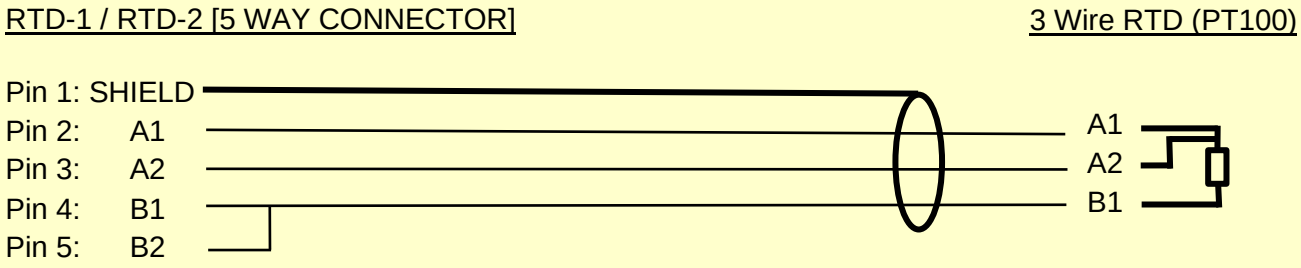

Figure 3 - RTD Sensor Pinouts

Note: Pin 4 and Pin 5 are shorted using the shorting link provided. Refer to Figure 5.

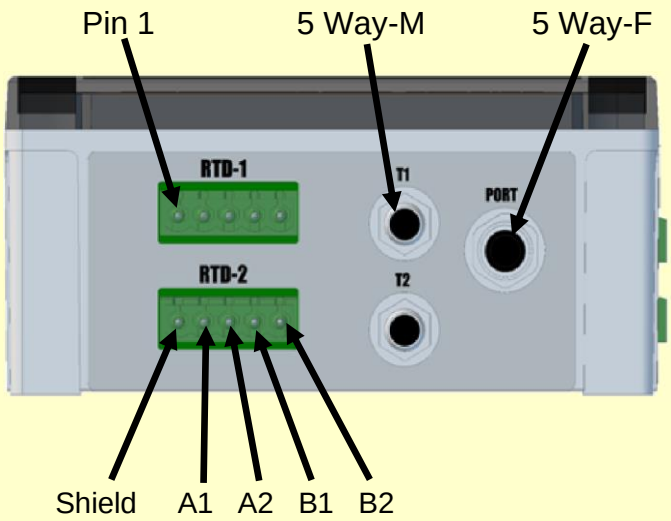

Figure 4 - Interface: Miro to Miro Aux

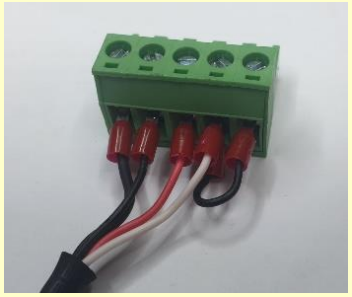

Figure 5 - 3 Wire RTD Wiring Example

4.3 Miro Aux to 4-20mA Sensors

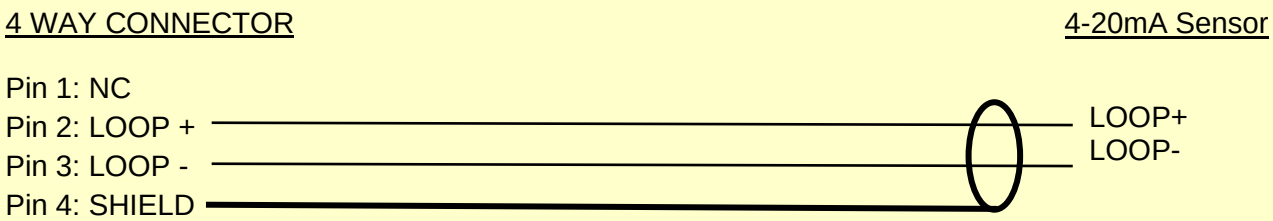

Figure 6 - 4-20mA Sensor Pinouts

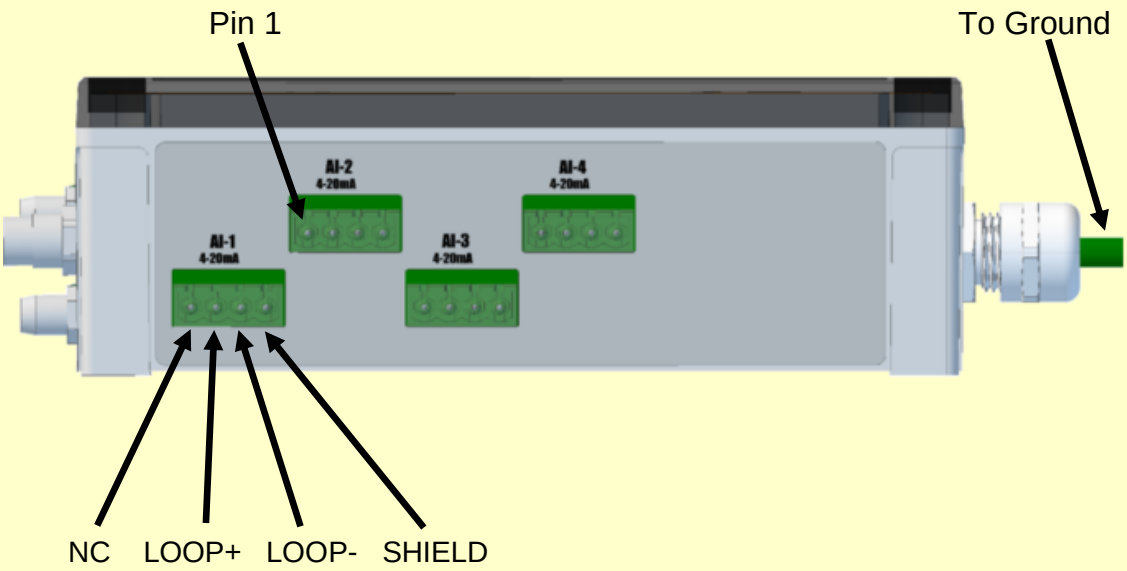

Figure 7 - 4-20mA Input Channels

5. Configuring the Miro

Go to the AUX-IO tab and select Module Type. Then fill in the details for Analog Inputs. E.g. see Figure 8.

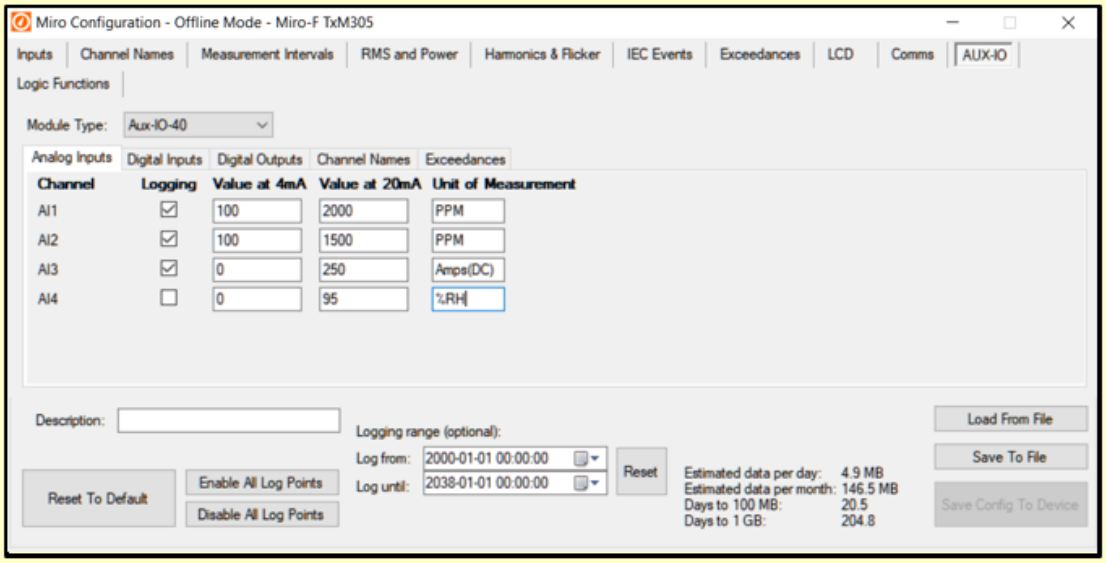

Figure 8

Go to the Channel Names tab and fill in the details. E.g. see Figure 9:

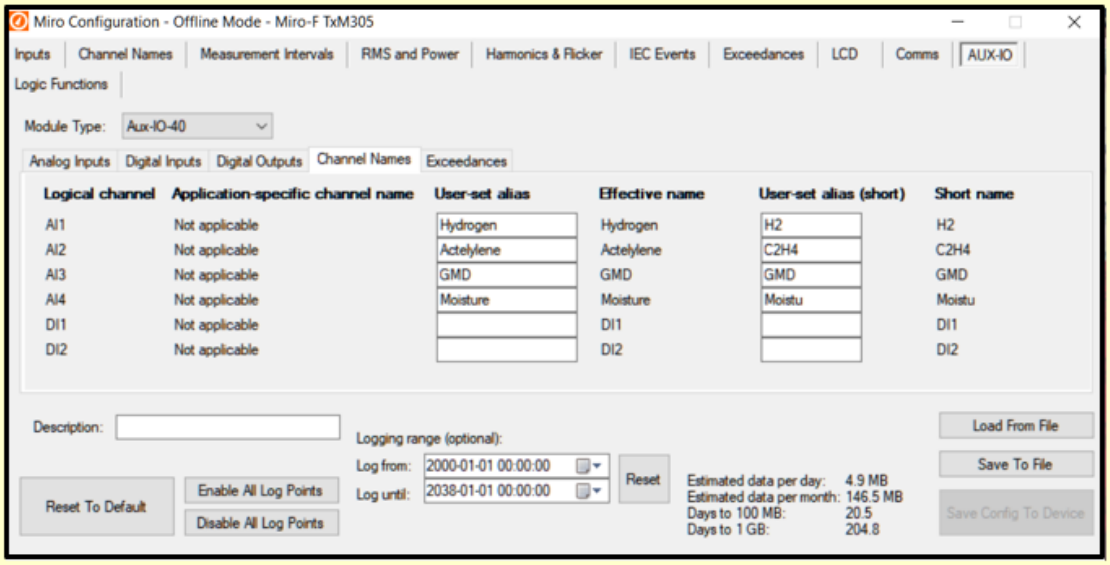

Figure 9

Go to the Exceedances tab and fill in the details. E.g. see Figure 10:

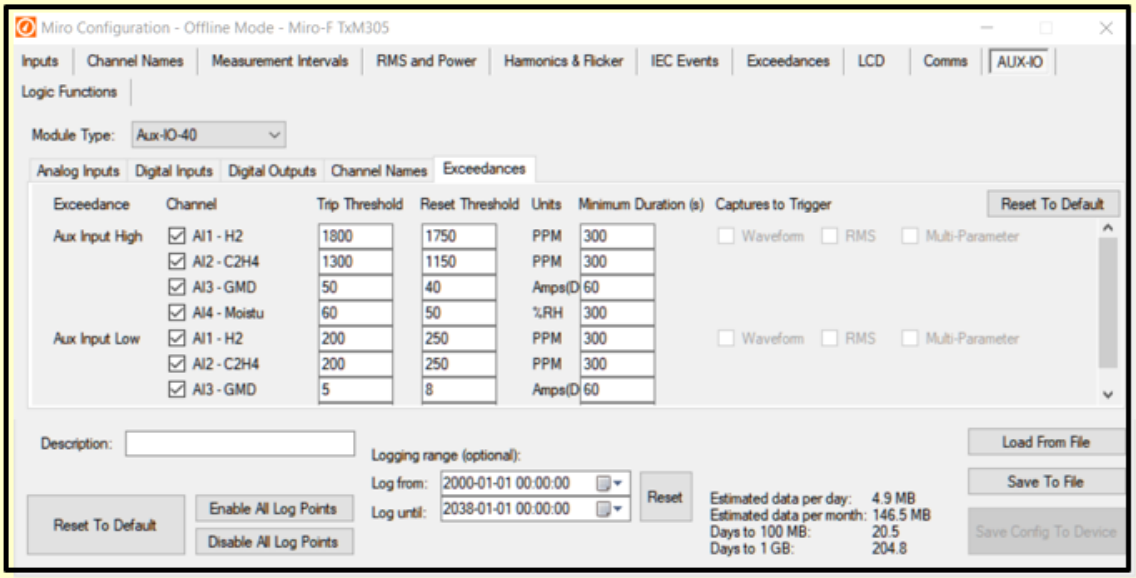

Figure 10

Go to the Logic Functions tab. Select the inputs from the drop-down menu. Then set the Truth Table. Then select the outputs desired. Note: Ticking the DNP3 Point check box maps the output to the DNP3 profile. E.g. see Figure 11:

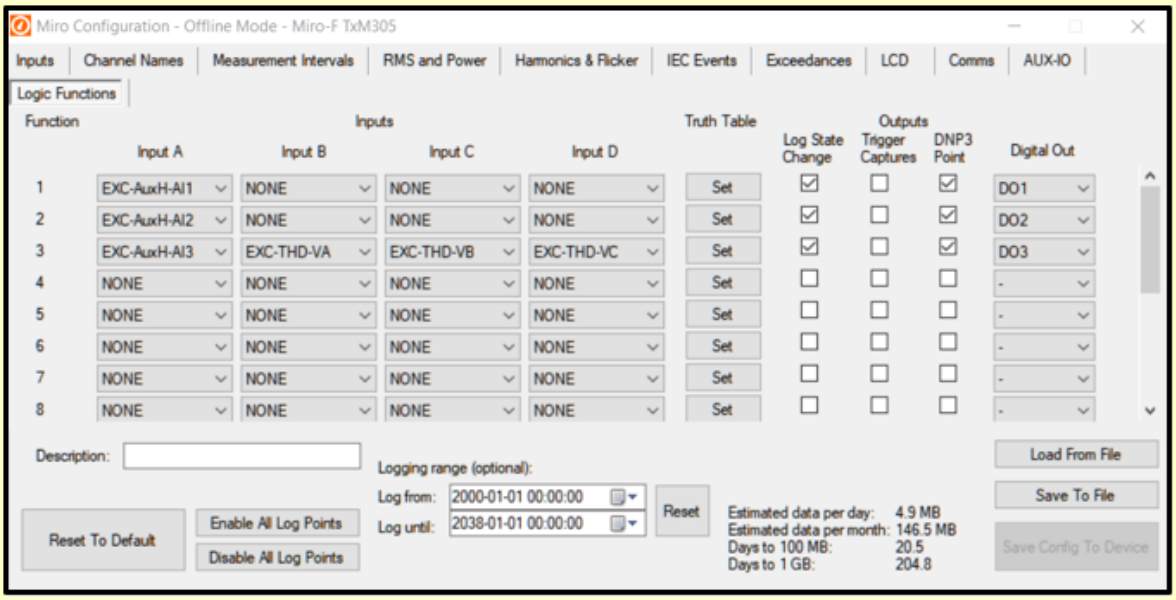

Figure 11

The Truth Table dictates the output, based on the state of individual inputs. E.g: The Truth Table for Logic Function 3 could be set up as follows. E.g. see Figure 12:

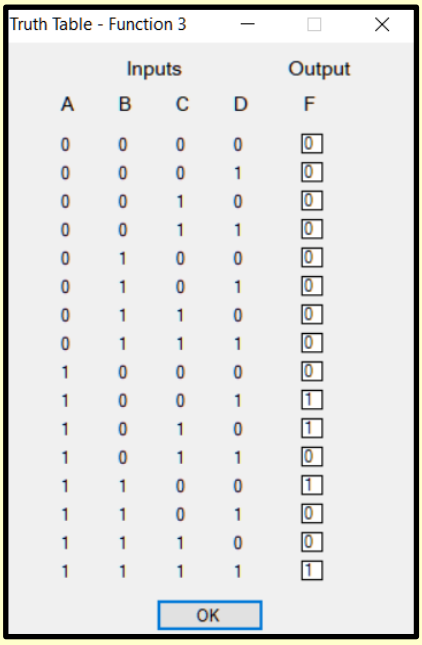

Truth Table - Function 3

Inputs				Output
A	B	C	D	F
0	0	0	0	0
0	0	0	1	0
0	0	1	0	0
0	0	1	1	0
0	1	0	0	0
0	1	0	1	0
0	1	1	0	0
0	1	1	1	0
1	0	0	0	0
1	0	0	1	1
1	0	1	0	1
1	0	1	1	0
1	1	0	0	1
1	1	0	1	0
1	1	1	0	0
1	1	1	1	1

OK

Figure 12

The Miro by default is configured for a 4 wire RTD (temperature) measurement. If you intend to use a 3 wire RTD, go to the Inputs tab and tick the PT100 3-Wire Compensation box and enter the DC resistance of the temperature sensor cables. E.g. see Figure 13:

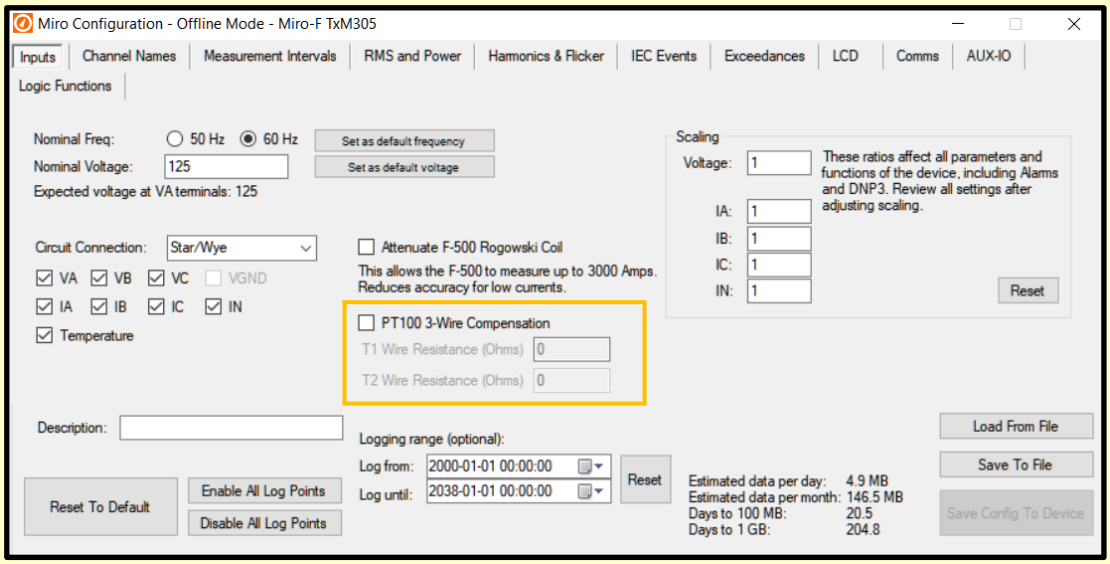

Figure 13

Save the configuration by clicking on 'Save Config to Device'

You are now ready to start logging. Data logging will commence when the Miro is energised. The flashing blue LED on the Miro Aux indicates:

- Miro Aux is powered up (slow flashing, 1 flash/second)
- Miro Aux is powered up and being polled by the Miro (fast flashing)